arXiv:quant-ph/0512148v1 19 Dec 2005

Quantum teleportation between nanomechanical modes

L. Tian & S. M. Carr

Atomic Physics Division, National Institute of Standards and Technology,

100 Bureau Drive, Stop 8423, Gaithersburg, Maryland 20899, USA

(Dated: February 9, 2008)

Abstract

We study a quantum teleportation scheme between two nanomechanical modes without local interaction. The nanomechanical modes are linearly coupled to and connected by the continuous variable modes of a superconducting circuit consisting of a transmission line and Josephson junctions. We calculate the fidelity of transferring Gaussian states at finite temperature and non-unit detector efficiency. For coherent state, a fidelity above the classical limit of 1/2 can be achieved for a large range of parameters.

Stimulating progress has been made in observing the mechanical vibration of nanostructures towards the quantum limit. The flexural mode of micro-fabricated resonator was recently measured by a superconducting single electron transistor (SSET) with a resolution approaching the Heisenberg limit [1]. Experimental realization [2] of nanomechanical oscillators with resonant frequencies $\gtrsim 1$ GHz enables novel coupling with superconducting quantum devices. It has been proposed that a piezoelectric nanomechanical resonator, with experimentally demonstrated high frequency and high quality factor, be used to perform controlled quantum logic gates between Josephson junction qubits [3]. Considering these results, the prospects are promising for the observation and application of quantum behavior in nanoelectromechanical systems [4, 5].

The nanomechanical modes, as a macroscopic continuous variable system with high quality factor, provide a unique system for the storage, local manipulation, and transfer of quantum information. Among such applications, one fundamental element is quantum teleportation [6, 7, 8], which has been demonstrated with various microscopic systems such as photons and trapped ions [9, 10]. Previously, it was proposed that the entanglement and teleportation be achieved between an optical and a nanomechanical mode of a mirror via pondermotive forces [11, 12, 13].

In this paper, we study a practical scheme of quantum teleportation between nanomechanical modes in an all solid-state circuit consisting of a superconducting transmission line and Josephson junctions. Each nanomechanical mode couples locally with the superconducting phase variable of the junctions, which can be treated as a continuous variable mode when choosing the Josephson energy to be much larger than the charging energy, in contrast to the qubit model in Ref. [3]. The transmission line acts as a dynamical connection between the phase variables at distant locations and hence forms an effective media, the "vacuum" in its optical counter part, between the nanomechanical modes. The superconducting transmission line has recently been shown to couple strongly with superconducting qubits [14] and has been proposed as a tool to interface different systems for scalable quantum computing [15]. After deriving the coupling constants for our scheme, we calculate the fidelity by a Wigner function approach when considering the effects of temperature and detector noise. We use this approach to derive the parameter regime in which a fidelity of transferring coherent state above the classical limit [16] of $F_c = 1/2$ can be achieved.

The central element in our scheme consists of two capacitavely-coupled continuous vari-

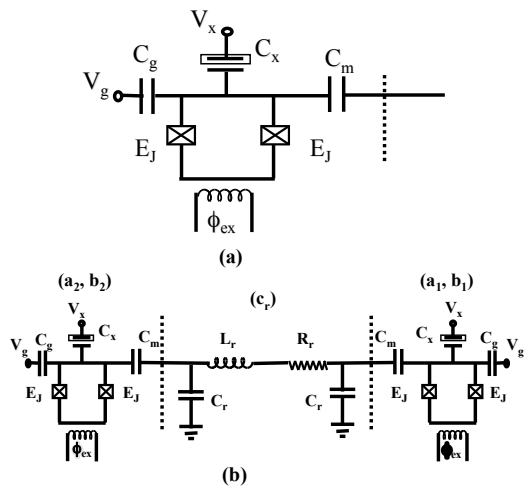

FIG. 1: Circuit. (a) Coupled nanomechanical resonator and superconducting island. The resonator is drawn as the boxed capacitor plate. (b) The circuit for quantum teleportation includes locally coupled modes (a_1, b_1) and (a_2, b_2) and the transmission line mode c_r.

able modes: the vibration of a nanomechanical resonator and the gauge invariant phase of a superconducting island connected to two Josephson junctions, shown in Fig.1(a). The junctions have Josephson energy E_J and capacitance C_J and can be controlled by the gate voltage V_g via a gate capacitance C_g and the external flux ϕ_{ex} in the superconducting loop. The nanomechanical resonator is biased at the voltage V_x and couples with the superconducting island via a capacitance $C_x \approx C_x^0(1 + \hat{x}/d_0)$ that depends on the canonical displacement $\hat{x}$ of the mechanical vibration and a characteristic distance d_0 between the island and the resonator.

The Hamiltonian of the system in Fig.1(a) is $H_t = H_\varphi + H_{nr} + H_{int}$. The first term

$$H_\varphi = \frac{(\hat{p}_\varphi + Q_0)^2}{2C_\Sigma} - E_J^{eff} \cos\hat{\varphi}, \tag{1}$$

describes the superconducting mode with the total capacitance $C_\Sigma = 2C_J + C_g + C_x^0 + C_m$ (see Fig.1(b) for C_m), $Q_0 = C_x^0 V_x + C_g V_g$ and the effective Josephson energy $E_J^{eff} = 2E_J \cos\phi_{ex}$. In the regime [17, 18] $E_J^{eff} \gg E_c$ with $E_C = e^2/2C_\Sigma$, the superconducting mode can be described as an harmonic oscillator with the frequency $\omega_\varphi = \sqrt{8E_J^{eff}E_C}/\hbar$, i.e. $H_\varphi = \hbar\omega_\varphi \hat{b}^\dagger \hat{b}$. Below we assume $Q_0 = 0$. For the resonator mode, $H_{nr} = \hbar\omega_{nr}\hat{a}^\dagger\hat{a}$ with frequency ω_{nr} amd mass m_{nr}. Here $\hat{a}$ $(\hat{b})$ and $\hat{a}^\dagger(\hat{b}^\dagger)$ are the annihilation and creation operators of the resonator mode (superconducting mode) respectively. For the bias voltage $2V_x^0 \cos\omega_d t$

with amplitude V_x^0 and driving frequency ω_d, the coupling between these two modes can be derived as $H_{int} = i\lambda_{ab}\cos\omega_d t(\hat{a}-\hat{a}^\dagger)(\hat{b}+\hat{b}^\dagger)$ with the coupling constant

$$\lambda_{ab} = \frac{2C_x^0 V_x^0}{e}\frac{\delta x_0}{d_0}\left(2E_J^{eff}\right)^{1/4} E_C^{3/4} \tag{2}$$

where $\delta x_0 = \sqrt{\hbar/2m_{nr}\omega_{nr}}$.

The basic operations of a continuous variable quantum teleportation scheme can be performed by the coupling H_{int}. In the interaction picture, with the driving frequency $\omega_d = \omega_\varphi + \omega_{nr}$, the coupling is $H_I = i\lambda_{ab}\left(\hat{a}\hat{b} - \hat{a}^\dagger\hat{b}^\dagger\right)$ in the rotating wave approximation, which generates squeezing and entanglement between the modes. With $\omega_d = \omega_\varphi - \omega_{nr}$, $H_I = i\lambda_{ab}\left(\hat{a}\hat{b}^\dagger - \hat{a}^\dagger\hat{b}\right)$, which generates a 50-50 beam splitter operation when applied for a duration of $\pi/4\lambda_{ab}$ and generates a swapping operation when applied for a duration of $\pi/2\lambda_{ab}$.

An unknown state in the nanomechanical mode a_1 can be teleported to another nanomechanical mode a_2 at a remote location via the superconducting network shown in Fig.1(b). The crucial steps in this scheme are to first generate entanglement between the locally coupled modes a_2 and b_2 and then transfer the entanglement via the superconducting transmission line to the superconducting mode b_1 that couples locally with a_1. The transmission line mode can be treated as a LC oscillator with frequency ω_r ($< \omega_\varphi$) and couples with the superconducting modes as $H_{IR} = \lambda_{bc}\left(\hat{b}_i\hat{c}_r^\dagger - \hat{c}_r^\dagger\hat{b}_i\right)$ with the coupling constant

$$\lambda_{bc} = \hbar\sqrt{\frac{C_m^2\omega_\varphi\omega_r}{4C_\Sigma C_r}} \tag{3}$$

with $C_r \gg C_m$. Here $\hat{c}_r$ and $\hat{c}_r^\dagger$ are creation and annihilation operators for the transmission line mode and C_m is the coupling capacitance.

In Table I, the steps of the teleportation process are shown starting from the generation of entanglement between a_2 and b_2. Then set $V_x^0 = 0$ to turn off the coupling between a_2 and b_2 and tune the frequency of b_2 to be in resonance with ω_r by adjusting the flux ϕ_{ex} to achieve the swapping between b_2 and c_r; and similarly between the modes b_1 and c_r. An entanglement between the distant modes a_2 and b_1 is now formed. The standard steps of a quantum teleportation scheme [8] can then be applied. The displacement [19] of a_2 at the end of the scheme can be achieved by displacing the mode b_2 with a time dependent gate charge Q_0 followed by mixing a_2 and b_2 with a beam splitter operation.

operation	modes	duration
squeezing with $r_2 = 1.5$	(a_2, b_2)	48 ns
swapping	(b_2, c_r)	0.8 ns
swapping	(c_r, b_1)	0.8 ns
50-50 beam splitter	(a_1, b_1)	25 ns
Bell-measurement δ_x, δ_p	(a_2, b_2)	50 ns

TABLE I: List of the operations in the quantum teleportation scheme. The modes involved in each operation are shown in the second column. The durations of the operations are estimated with the parameters given in the text.

The scheme discussed above requires

$$\frac{\omega_{nr}}{Q}, \gamma_d \ll \frac{\lambda_{ab}}{\hbar}, \frac{\lambda_{bc}}{\hbar}, \tau_m^{-1} \ll \omega_{nr}, \omega_r, \omega_\varphi \ll E_J^{eff} \tag{4}$$

where Q is the quality factor of the resonator and γ_d is the dissipation rate of the superconducting modes. The first inequality ensures that the scheme is not affected by the dissipation from the environment. For the rotating wave approximation to be valid, the second inequality needs to be satisfied. The last inequality ensures that the harmonic oscillator model of the phase variables is valid. We choose the parameters of the junctions: $C_\Sigma \approx 0.1$ pF and $E_J = 500$ GHz [17, 18], which gives $\omega_\varphi \approx 28$ GHz. For the resonators [1, 2], $\omega_{nr} \approx 1$ GHz and $\delta x_0 = 22$ fm. With $d_0 = 100$ nm, $C_x^0 = 0.65$ fF and $V_x^0 = 2.4$ V, we derive the coupling constant $\lambda_{ab} = 5$ MHz. For the transmissition line [14], $C_m = 1$ fF, $C_r = 4$ fF and $\omega_r \approx 5$ GHz, resulting in the coupling constant $\lambda_{bc} = 0.3$ GHz. Experimentally, quality factors of $Q \approx 10^3$ have been demonstrated and thus Eq. (4) is satisfied. Assuming a larger quality factor, for example $Q = 10^4$, it has a negligible effect on the scheme. For the superconducting modes with our parameters, the dissipation has been measured to be ~ 100 kHz [17, 18] and easily satisfies Eq. (4). The measurement time $\tau_m = 50$ ns listed in Table I satisfies the condition in Eq. (4).

In a solid-state system and the microwave regime, noise and finite temperature can seriously affect the fidelity of the teleportation. We study these effects with a Wigner function approach. The modes $i = b_1, b_2, c_r, a_2$ are initially in thermal equilibrium labeled by a dimensionless constant $\Theta_i = \coth \frac{\hbar\omega_i}{2k_B T}$ at temperature T. In our scheme, $\omega_\varphi, \omega_r \gg k_B T$ so that $\Theta_{bi,r} = 1$; while $\omega_{nr} \sim k_B T$, we have $\Theta_{ai} \geq 1$. The squeezing operation applied for a

time t_s (and hence a squeezing parameter $r_2 = \lambda_{ab} t_s$) generates entanglement [21, 22] with the Wigner function $W^{sq}(x_{a2}, p_{a2}, x_{b2}, p_{b2})$. A measurement on variable x_i (or similarly on p_i) can be described as a POVM $\Pi_{x_m}(x_i) \propto e^{-\frac{(x_i - x_m)^2}{2\delta_x^2}}$ with the noise amplitude δ_x (or δ_p) and measurement record x_m (p_m).

For an initial state $W^{in}(x_{a1}, p_{a1})$, after displacing the mode a_2 by $(\sqrt{2}x_m, \sqrt{2}p_m)$ and averaging over the measurement record, the final Wigner function is

$$\begin{aligned} W^f(x_{a2}, p_{a2}) &= C \int d^2x_{b1} d^2x_{a1} d^2x_m e^{-\frac{(x_{a1}-x_m)^2}{2\delta_x^2} - \frac{(p_{b1}-p_m)^2}{2\delta_p^2}} \\ &\times W^{in}(x_{b1}, p_{a1}) W^{sq}(x_{a2} - \sqrt{2}x_m, p_{a2} - \sqrt{2}p_m, x_{b1} - \sqrt{2}x_{a1}, \sqrt{2}p_{b1} - p_{a1}) \end{aligned} \quad (5)$$

where C is the renormalization factor and $d^2x_i = dx_i dp_i$. It can be shown that $W^f = W^{in} \circ G_\mu(x_{a2}, p_{a2})$ is a convolution between the initial state and a Gaussian state $G_\mu(x, p) = \frac{1}{\pi\sqrt{\mu_x \mu_p}} e^{-x^2/\mu_x - p^2/\mu_p}$ with $\mu = (\mu_x, \mu_p)$ and

$$\mu_i = 4\delta_i^2 + \frac{1}{2}(1 + \Theta_{a2}) e^{-2r_2} \quad (6)$$

for $i = x, p$. For a Gaussian state $W^{in} = G_{\mu_0}(x_{a1} - x_{in}, p_{a1} - p_{in})$, the final state is the Gaussian state $G_{\mu+\mu_0}(x_{a2} - x_{in}, p_{a2} - p_{in})$. At large squeezing, $\mu_{x,p}$ are independent of the dimensionless temperature Θ_{a2}; the entanglement can suppress the effect of the temperature, but can not suppress the effect of the detector noise.

The fidelity defined by $F_m(\rho_{a1}^{in}) = \left(\mathrm{Tr}(\sqrt{\sqrt{\rho_{a1}^{in}} \rho_{a2}^f \sqrt{\rho_{a1}^{in}}}) \right)^2$ describes the overlap between the final state with the density matrix ρ_{a2}^f and the initial state with the density matrix ρ_{a1}^{in}. For a Gaussian initial state with $\mu_0 = (\frac{\Theta_{a1}}{2}, \frac{\Theta_{a1}}{2})$, we derive [23, 24]:

$$F_m(\rho_{a1}^{in}) = \frac{2}{\sqrt{(1 + 2\Theta_{a1}\sigma_x)(1 + 2\Theta_{a1}\sigma_p)} - \sqrt{(4\sigma_x\sigma_p - 1)(\Theta_{a1}^2 - 1)}}, \quad (7)$$

where $\sigma_i = \mu_i + \Theta_{a1}/2$ for $i = x, p$ and the fidelity is independent of the initial displacement. With $\mu_{x,p} = 0$, $F_m = 1$ and agrees with the above discussion.

The fidelity of transferring an arbitrary coherent state via a classical channel is bounded [16] by the upper limit $F_c = 1/2$. With quantum entanglement, a fidelity $F_c > 1/2$ can be achieved even in noisy environments. Following Eq.(6), we study the fidelity with two parameters: $\eta = \frac{1}{2}(1 + \Theta_{a2}) e^{-2r_2}$ describing the interplay between temperature and squeezing

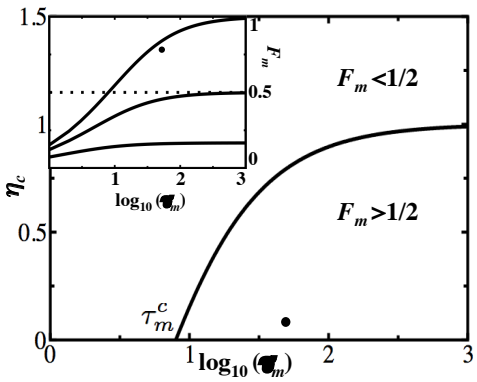

FIG. 2: Fidelity for transferring a coherent state. Main plot: $\eta_c(\tau_m)$ versus $\log_{10}(\tau_m)$. The critical measurement time is labeled by τ_m^c. The solid dots indicate the operating point with the parameters in Table I. Inset: F_m versus τ_m for $\eta = 0, 1, 5$ respectively from top to bottom. The dotted line is the classical limit.

(entanglement), and the measurement time τ_m which determines the noise amplitude with $\delta_{x,p} = c_{x,p}/\sqrt{\tau_m}$ and $c_{x,p}$ as device-dependent parameters (below). We find that with a coherent state as the initial state and at a given τ_m, a critical index $\eta_c(\tau_m)$ exists that $F_m > 1/2$ for $\eta < \eta_c$; and $F_m < 1/2$ for $\eta > \eta_c$, as is plotted in Fig.2. It is obvious that the effect of finite temperature can be cancelled by the squeezing. However, for $\tau_m < \tau_m^c$, with τ_m^c the critical measurement time labeled in the figure, the fidelity is always less than the classical limit. With the parameters in Table I, $\eta = 0.08$, $\tau_m = 50\,\text{ns}$ (as indicated in Fig. 2), and a temperature of 50 mK, we have the fidelity $F_m = 0.78$.

For an initial state at finite temperature with $\Theta_{a1} > 1$, the fidelity is plotted in Fig.3 under the condition $\Theta_{a1} = \Theta_{a2}$. At fixed r_2 and $\delta_{x,p}(\tau_m)$, the fidelity increases well above $F_c = 1/2$ with an increase in temperature. This is because the width of the Wigner function for the initial Gaussian state increases with temperature and less information is transferred via the teleportation.

The Bell-type measurement includes phase sensitive detection of the variables $\hat{x}_{a1}$ and $\hat{p}_{b1}$. Here we consider a specific detection scheme using a SET. It has been demonstrated that a SET can be operated as a radio-frequency mixer [25] that performs homodyne and heterodyne detections on charge signals and can perform fast and sensitive measurement [26] of the vibrations of nanomechanical modes [1, 20, 27]. In our scheme, the resonator is biased at a static voltage V_x^d during the measurement of $\hat{a}1$ and couples with the SET

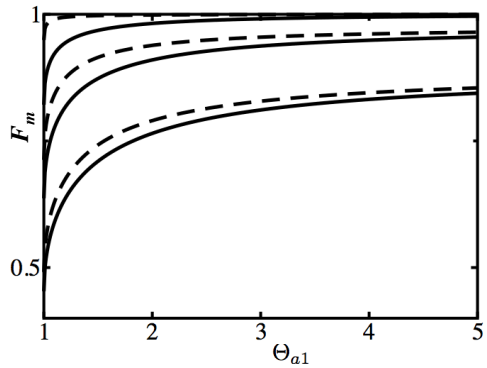

FIG. 3: Fidelity for transferring finite temperature state. The solid lines: $\tau_m = 50\,\mathrm{ns}$ and $r_2 = 2, 0.5, 0$ respectively from top to bottom. The dashed lines: $\tau_m = 10^3\,\mathrm{ns}$ and $r_2 = 2, 0.5, 0$ respectively from top to bottom.

via the capacitance $C_x^d(\hat{x}_{a1}) = C_x^d(1 + \hat{x}_{a1}/d_1)$ where d_1 is a normalized distance. The total ac charge signal is a mixing between the charge of the resonator and an ac gate charge: $Q = C_x^d V_x^d \langle \hat{x}_{a1} \rangle / d_1 + Q_{ac} \cos \omega_{nr} t$. Here $\langle \hat{x}_{a1} \rangle = x_i \cos \omega_{nr} t + \frac{p_i}{m\omega_{a1}} \sin \omega_{nr} t$ with $x_i = \langle \hat{x}_{a1} \rangle$ and $p_i = \langle \hat{p}_{a1} \rangle$. Let $\alpha_g = \frac{2\pi}{e} Q_{ac}$ and $\alpha_x = \frac{2\pi}{ed_1} C_x^d V_x^d$. By choosing the static bias to be at the extreme point [25], the current response of the SET is $I_Q(t) = I_0 \cos \frac{2\pi}{e} Q$ with I_0 the amplitude of the current. Using the relation: $\cos(\alpha \sin \varphi) = \sum_{n=-\infty}^{\infty} J_n(\alpha) \cos n\varphi$ for the Bessel functions J_n and $\alpha_x x_i$, $\alpha_x \frac{p_i}{m\omega_{nr}} \ll \alpha_g$, we derive the static component of the current as

$$I_0 J_0(\alpha_g) - I_0 J_1(\alpha_g) \alpha_x x_i, \tag{8}$$

which is linear in the quadrature x_i. When choosing $\alpha_g = 1.9$, we have $J_1(1.9) \approx 0.58$ and the current response is maximized. As $J_n(x) = -J_{-n}(x)$, the lowest ac component of the current has the frequency of $2\omega_{nr}$. When the bandwidth of the detector is below $2\omega_{nr}$, this signal and other ac components are not present in the detection. A similar measurement can be conducted on the quadrature variable of p_{b1}.

The sensitivity of the detector is limited by the shot noise of the SET [26]. In our scheme, the displacement sensitivity $\sqrt{S_x} = \sqrt{S_q}/(\partial q/\partial x_i)$ can be derived as

$$\sqrt{S_x} \approx \beta_{hd} \frac{\sqrt{S_q} d_1}{C_x^d V_x^d}. \tag{9}$$

where $\beta_{hd} \sim 1$ is a numerical factor. With a charge sensitivity of $\sqrt{S_q} \sim 10^{-6} e/\sqrt{\mathrm{Hz}}$ [26], $C_x^d = 0.5 \times 10^{-15}\,\mathrm{F}$ and $V_x^d = 10\,\mathrm{V}$, this gives $\sqrt{S_x} \approx 3 \times 10^{-18}\,\mathrm{m}/\sqrt{\mathrm{Hz}}$. At $\tau_m = 50\,\mathrm{ns}$ and

our parameters for the resonator, the accuracy of the displacement is $\Delta x = \sqrt{S_x/\tau_m} \approx 14\,\mathrm{fm}$ and $\delta_x \approx 0.32$. Similarly for the measurement of $\hat{p}_{b1}$, we can derive the sensitivity of the measurement as $\sqrt{S_p} = \beta_{hd}\sqrt{S_q}C_\Sigma/C_p^d$. With $C_p^d = 1\,\mathrm{fF}$ and $\tau_m = 50\,\mathrm{ns}$, we find $\Delta p = 0.45e$ and $\delta_p \approx 0.07$.

In conclusion, we studied a quantum teleportation scheme that transfers information between nanomechanical modes in a solid-state setup. We showed that at practical parameters, fidelity above the classical limit can be achieved by utilizing quantum entanglement.

[1] M.D. LaHaye, O. Buu, B. Camarota, and K. C. Schwab, Science **304**, 74 (2004).

[2] X. Huang, C. A. Zorman, M. Mehregany, and M. L. Roukes, Nature (London) **421**, 496 (2003).

[3] A. N. Cleland & M. R. Geller, Phys. Rev. Lett. **93**, 070501 (2004).

[4] M. Blencowe, Phys. Rep. **395**, 159 (2004).

[5] A. D. Armour, M. P. Blencowe, and K. C. Schwab, Phys. Rev. Lett. **88**, 148301(2002).

[6] C. H. Bennett, G. Brassard, C. Crepeau, R. Jozsa, A. Peres, and W. K. Wootters, Phys. Rev. Lett. **70**, 1895 (1993).

[7] L. Vaidman, Phys. Rev. A **49**, 1473 (1994).

[8] S.L. Braunstein and H.J. Kimble, Phys. Rev. Lett. **80**, 869 (1998).

[9] D. Bouwmeester *et al.*, Nature (London) **390**, 575 (1997); D. Boschi, S. Branca, F. DeMartini, L. Hardy, S. Popescu, Phys. Rev. Lett. **80**, 1121 (1998); A. Furusawa *et al.*, Science **282**, 706. (1998).

[10] M. Riebe *et al.*, Nature **429**, 734 (2004); M.D. Barrett *et al.*, Nature **429**, 737 (2004).

[11] S. Mancini, D. Vitali and P. Tombesi, Phys. Rev. Lett. **90**, 137901 (2003).

[12] S. Mancini, V. Giovannetti, D. Vitali and P. Tombesi, Phys. Rev. Lett. **88**, 120401 (2002).

[13] W. Marshall, C. Simon, R. Penrose and D. Bouwmeester, Phys. Rev. Lett. **91**, 130401 (2003).

[14] A. Wallraff *et al.*, Phys. Rev. Lett. **95**, 060501 (2005); A. Wallraff *et al.*, Nature (London) **431**, 162 (2004).

[15] L. Tian, P. Rabl, R. Blatt and P. Zoller, Phys. Rev. Lett. **92**, 247902 (2004).

[16] S.L. Braunstein, C.A. Fuchs, H.J. Kimble and P. van Loock, Phys. Rev. A **64**, 022321 (2001).

[17] A. Lupascu, C.J.M. Verwijs, R.N. Schouten, C.J.P.M. Harmans and J.E. Mooij, Phys. Rev. Lett. **93**, 177006 (2004).

[18] J.C. Lee, W.D. Oliver, T.P. Orlando and K. K. Berggren, IEEE Trans Appl. Superconductivity **15**, 841 (2005).

[19] L. Tian, Phys. Rev. B **72**, 195411 (2005).

[20] R. G. Knobel and A. N. Cleland, Nature **424**, 291 (2003).

[21] R. Simon, Phys. Rev. Lett. **84**, 2726 (2000).

[22] L-M. Duan, G. Giedke, J.I. Cirac and P. Zoller, Phys. Rev. Lett. **84**, 2722 (2000).

[23] M. Ban, Phys. Rev. A 69, 054304 (2004).

[24] P. Marian, T.A. Marian and H. Scutaru, Phys. Rev. Lett. **88**, 153601 (2002).

[25] R. Knobel, C.S. Yung and A.N. Cleland, Appl. Phys. Lett. **81**, 532 (2002).

[26] R.J. Schoelkopf, P. Wahlgren, A.A. Kozhevnikov, P. Delsing, and D.E. Prober, Science **280**, 1238 (1998).

[27] M.P. Blencowe and M.N. Wybourne, Appl. Phys. Lett. **77**, 3845 (2000).